TRAUSCH DYNAMICS

Dimensions

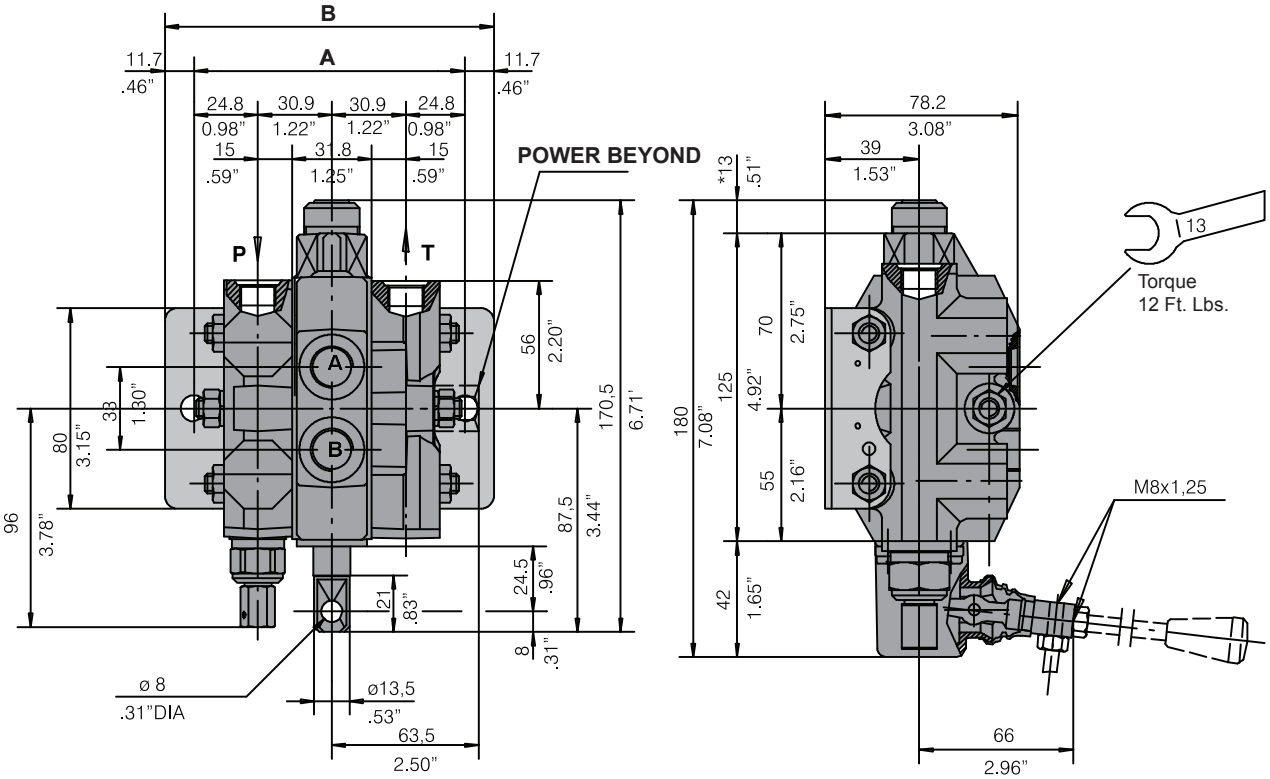

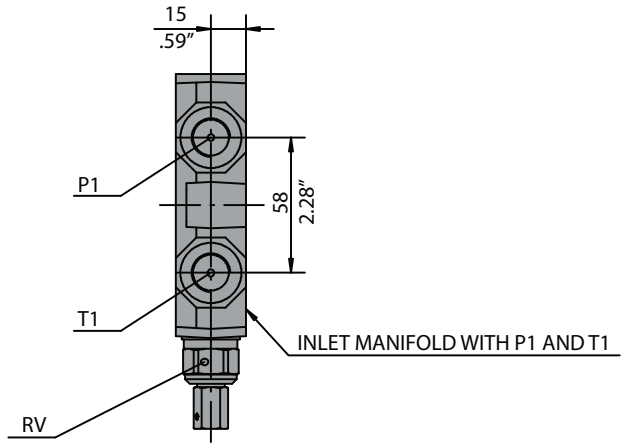

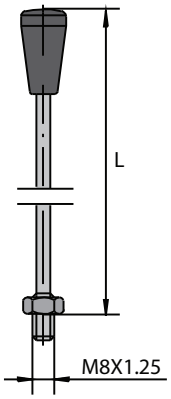

Stock Number	Length
7154096	5.9" (Standard)
7154100	7.8"
7154104	9.8"
7154108	11.8"

Dimensional data shown in mm and inches

Ex.: 63.5 = mm
2.50" = inches

	1 Work Section	2 Work Sections	3 Work Sections	4 Work Sections	5 Work Sections	6 Work Sections	7 Work Sections	8 Work Sections	9 Work Sections	10 Work Sections
Dimension A - mm	111.4	143.2	175.0	206.8	238.6	270.4	302.2	334.0	365.8	397.6
Dimension A - inches	4.38"	5.64"	6.89"	8.14"	9.39"	10.64"	11.90"	13.15"	14.40"	15.65"
Dimension B - mm	134.8	166.6	198.4	230.2	262.0	293.8	325.6	357.4	389.2	421.0
Dimension B - inches	5.31"	6.56"	7.81"	9.06"	10.31"	11.57"	12.82"	14.07"	15.32"	16.57"
Tie-Rod	7153850	7153852	7153854	7153856	7153858	7153860	7153862	7153864	7153866	7153868

*QTY 3 tie-rods required

**Contact a sales representative for more information on mixing manual and electric work sections.

TRAUSCH DYNAMICS

3727 Westgate Rd. • Grand Island, NE 68803 • Phone: 800-323-5749 • Fax: 308-382-0253